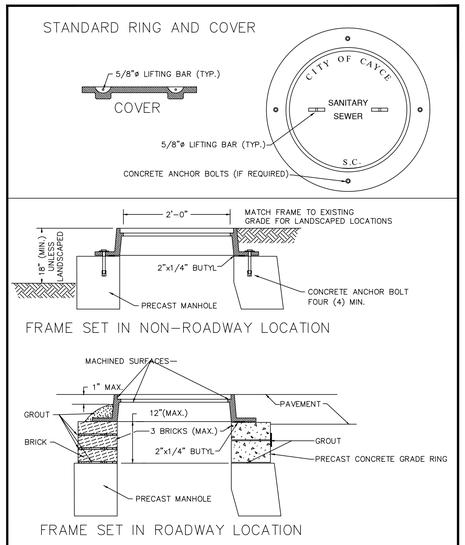

NOTE: WHERE M.H. IS IN ROAD SHOULDER AND ROAD DOES NOT HAVE CURB AND GUTTER, DO NOT USE ANCHOR BOLTS IN FRAME.

STANDARD DETAIL
CITY OF CAYCE
STANDARD MANHOLE FRAME & COVER
APPROVED: # CAYCE-7A

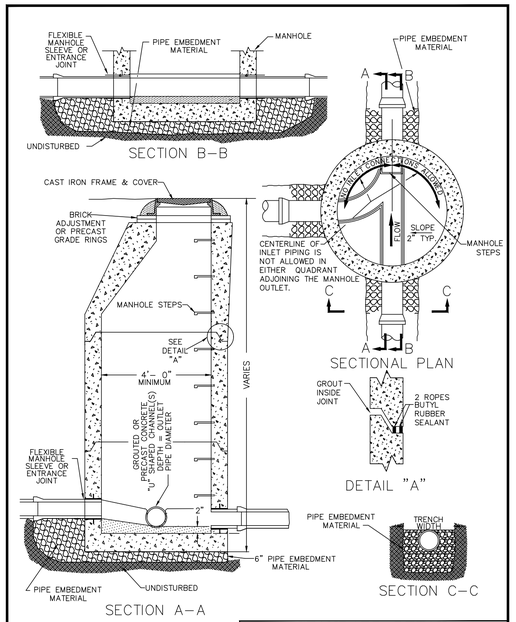

NOTE:
MANHOLE STEPS TO BE VERTICALLY IN LINE WITH "INVERT OUT" FOR PIPE 18" AND LESS. OVER 18" TO BE LOCATED IN LINE WITH BENCH.

STANDARD DETAIL
CITY OF CAYCE
STANDARD MANHOLE
APPROVED: # CAYCE-1

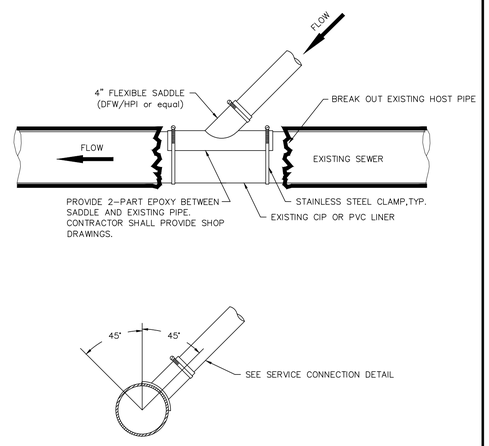

NOTE:
THIS DETAIL TO BE USED FOR TAPS ON EXISTING SEWER MAINS 12 INCHES IN DIAMETER AND LESS.

NOT FOR USE ON NEW CONSTRUCTION.

STANDARD DETAIL
CITY OF CAYCE
TAPPING SADDLE ON EXISTING LINER
APPROVED: # CAYCE-9B

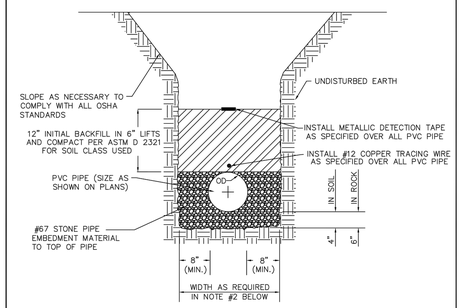

PVC GRAVITY SEWER TRENCH DETAIL
NOT TO SCALE

NOTES:

1. WHERE THE TRENCH WILL BE WITHIN THREE FEET OF THE EDGE OF THE EXISTING PAVEMENT, FLOWABLE FILL MAY BE REQUIRED FOR BACKFILL MATERIAL. CONSULT ENCROACHMENT PERMITS FOR SPECIFIC REQUIREMENTS.
2. MINIMUM WIDTH SHALL BE NOT LESS THAN THE GREATER OF EITHER THE PIPE OUTSIDE DIAMETER PLUS 16 IN. OR THE PIPE OUTSIDE DIAMETER TIMES 1.25 PLUS 12 IN.
3. NO BOULDERS OR STONES WILL BE USED IN INTIAL BACKFILL OR 2 FEET ABOVE TOP OF PIPE.
4. PVC PIPE NOT ALLOWED WITH LESS THAN 3'-0" COVER.

STANDARD DETAIL
CITY OF CAYCE
PVC GRAVITY SEWER TRENCH DETAIL
APPROVED: # CAYCE-23A

NOTES:

1. WYE CONNECTIONS ARE STANDARD FOR NEW SEWER MAIN CONSTRUCTION.
2. FORCE MAINS CARRYING DOMESTIC WASTEWATER FROM SANITARY CONVENIENCES WITHIN A SINGLE BUILDING, MAY BE CONNECTED TO A 4" CITY GRAVITY SERVICE LINE PROVIDED THAT GRAVITY FLOW WILL BE MAINTAINED DURING PROPOSED MAXIMUM DISCHARGE RATE FOR THE GRINDER OR EFFLUENT PUMP(S).
3. WHERE COVER IS LESS THAN 3 FT. DUCTILE IRON MUST BE USED. ALL DUCTILE IRON SEWER PIPE AND FITTINGS SHALL BE INTERNALLY COATED WITH PROTECTO 401.
4. WHERE DUCTILE IRON IS REQUIRED RISER MAY BE CONSTRUCTED WITH SDR-35 PVC.
5. TRACER WIRE REQUIRED OVER SERVICE LINE.

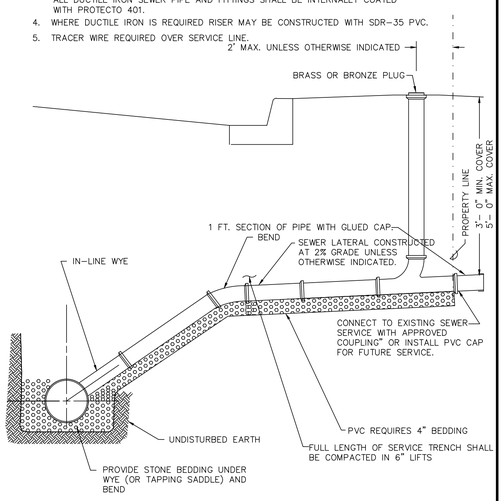

STANDARD DETAIL
CITY OF CAYCE
SANITARY SEWER SERVICE
APPROVED: # CAYCE-11A

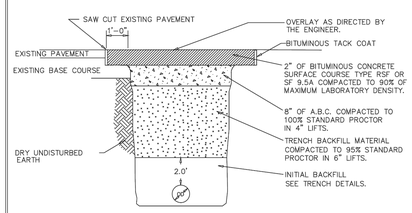

PRIVATE DRIVE AND PARKING LOT PAVEMENT REPAIR
(IN AREAS OF NON-HEAVY DUTY TRAFFIC)

NOTES:

1) EDGES ARE TO BE SAW CUT WITH A CONCRETE SAW TO A NEAT SQUARED EDGE, AND BROOMED CLEAN OF DUST PRIOR TO APPLICATION OF TACK.

2) PAVEMENT REPAIR DETAIL SHALL BE USED FOR ALL BITUMINOUS SURFACES WHICH ARE NOT UNDER CONTROL OF THE S.C.D.O.T.

STANDARD DETAIL
CITY OF CAYCE
PERMANENT PAVEMENT REPAIR
APPROVED: # CAYCE-19

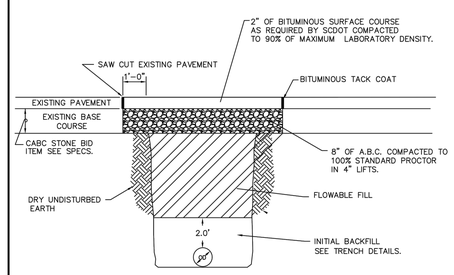

PAVEMENT REPAIR AND RESURFACING FOR SCDOT ROADS AND COUNTY ROADS

NOTES:

1. EDGES ARE TO SAWED WITH A CONCRETE SAW TO A NEAT SQUARED EDGE, AND BROOMED CLEAN OF DUST PRIOR TO APPLICATION OF TACK COAT.

STANDARD DETAIL
CITY OF CAYCE
PERMANENT PAVEMENT REPAIR
APPROVED: #CAYCE -18A

CITY OF CAYCE, SC

SEWER LINING GRANT PROJECT
SANITARY SEWER DETAILS

RAILROAD ST AND HOLLAND AVE SEWER LINE REPLACEMENT

DRAWN: K.S.M. | DATE: APRIL 2020 | JOB: | SHT: 4 OF 4
APPROVED: B.A.B. | SCALE: NTS

SOUTH CAROLINA PROFESSIONAL ENGINEER No. 32028 KARLYN M. STEE

REVISIONS

No.	DESCRIPTION	DATE

REDISCOVER CAYCE at a new kind of city

Engineering Division